INGECON SUN String Station

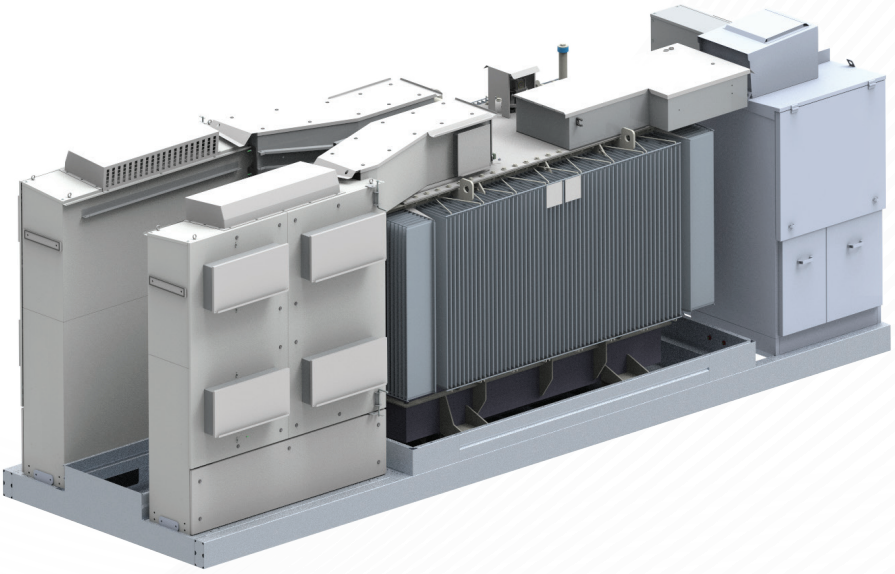

MV SOLUTION UP TO 8.4 MVA.
A MEDIUM VOLTAGE STATION FOR DESCENTRALIZED SOLAR PV INVERTERS

MV station designed to connect and hold Ingeteam's three-phase string inverters working as an interface with the grid.

String inverter optimization

The String Station has been conceived to enable and optimize the use of Ingeteam's INGECON® SUN 330-350TL M12 inverter, ensuring a perfect connection between the PV plant and the grid. This turnkey solution is capable of connecting up to 8.4 MW of 1,500 V 3Play inverters to a medium voltage grid.

Available worldwide

The INGECON® SUN String Station can be marketed and installed everywhere in the world, as it is supplied totally integrated and it is easily transportable as a Plug & Play solution.

Equipped with everything necessary

It is supplied with the low-voltage string-inverter protections, auxiliary services, LV / MV transformer and medium-voltage switchgear.

Maximum cost-effectiveness

The INGECON® SUN String Station is a standard solution designed to maximize the compactness and cost-effectiveness of the overall equipment. All the elements are prepared to withstand adverse weather conditions. Moreover, they are supplied pre-connected and preintegrated into a skid in order to guarantee a Plug & Play installation.

Specifications included in this datasheet could change without notice. Please contact Ingeteam's sales department in case of any queries.

ACC2022IQE03_

Ingeteam

A medium voltage String Station for descentralized solar PV inverters which allows flexibility and scalability

Main features

- Output power up to 8.4 MW.
- Compatible with INGECON® SUN 330-350TL M12 inverter.
- Available up to 33 kV output voltage.
- Available with outdoor LV / MV transformer.
- IP54 MV Switchgear.
- Plug & Play solution.

AC Combiner Box

- Scalable system thanks to its modular design.
- Circuit breaker protection per each AC Combiner Box.
- 1500 V DC fuses.
- Forced air ventilation.

Standard MV equipment

- LV / MV transformer with reduced power losses.
- LC MV switchgear.
- Protection relay included in the transformer.
- MV protection with circuit breaker.
- Oil deposit integrated in the skid.
- Filtering kit in the oil deposit.

Benefits

- Maximum reliability, higher safety.
- Reduced maintenance.
- Flexibility and scalability.
- Greater power density.

INGECON® SUN 330-350TL M12

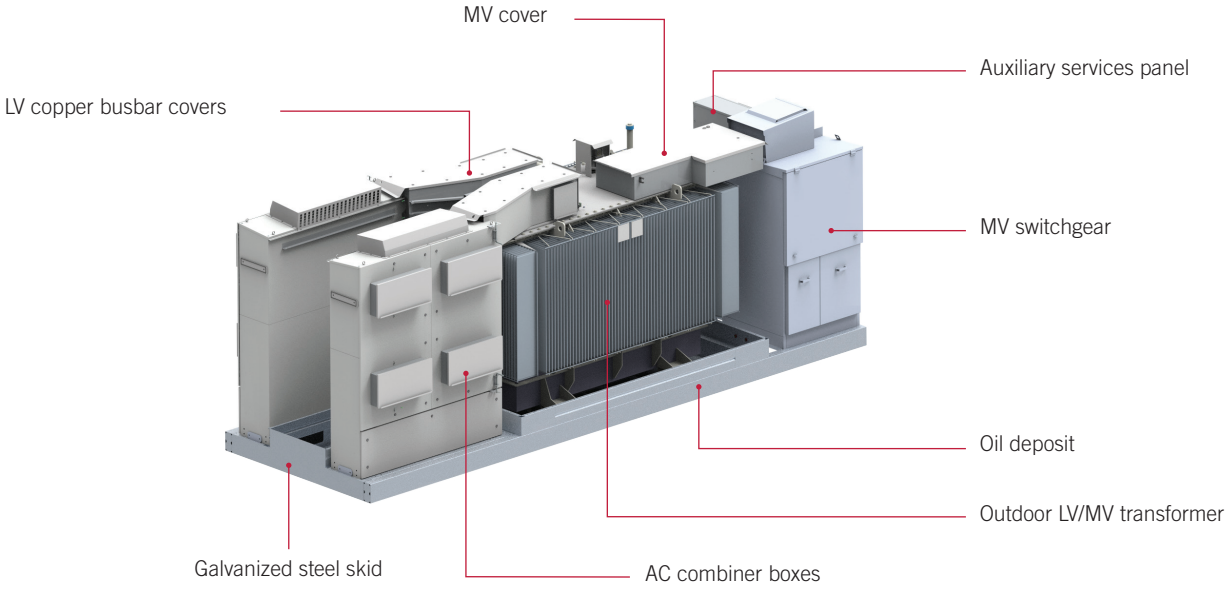

Specifications included in this datasheet could change without notice. Please contact Ingeteam's sales department in case of any queries.

ACC2022IQE03_

	SST 4620	SST 4900	SST 7900	SST 8400
AC COMBINER BOX				
Inverter model	INGECON SUN 330TL M12	INGECON SUN 350TL M12	INGECON SUN 330TL M12	INGECON SUN 350TL M12
Numer of inverters	14	14	24	24
Maximum output power	4,620 kVA	4,900 kVA	7,900 kVA	8,400 kVA
AC output current	3,332 A	3,500 A	5,712 A	6,000 A
AC voltage	800 V			
Total aux. consumption	14 kW			
LV / MV TRANSFORMER				
Type	Oil-immersed hermetically sealed transformer			
Medium voltage	Up to 52 kV			
Cooling system	ONAN			
Max. efficiency	99%			
Protection degree	IP54			
MV SWITCHGEAR				
Type	RLC (bus riser, line incoming with disconnecting switch, transformer protection)			
Medium voltage	Up to 52 kV (class 40.5 kV)			
Rated current	630 A			
Protection degree	IP54			
GENERAL DATA				
Operating temperature range	From -20ºC to +50ºC			
Relative humidity (non-condensing)	0-100%			
Maximum altitude	4,000 masl (for instalations beyond 1,000 masl, please contact Ingeteam's Sales Department)			
EQUIPMENT				
Inverter version	INGECON® SUN 330-350TL M12			
MECHANICAL INFORMATION				
Structure type	Hot dip galvanized skid			
Body dimensions (W x D x H)	7,000 x 2,100 x 2,560 mm			
Weight	25 ton			
Standards	IEC 60076, IEC 62271-200			

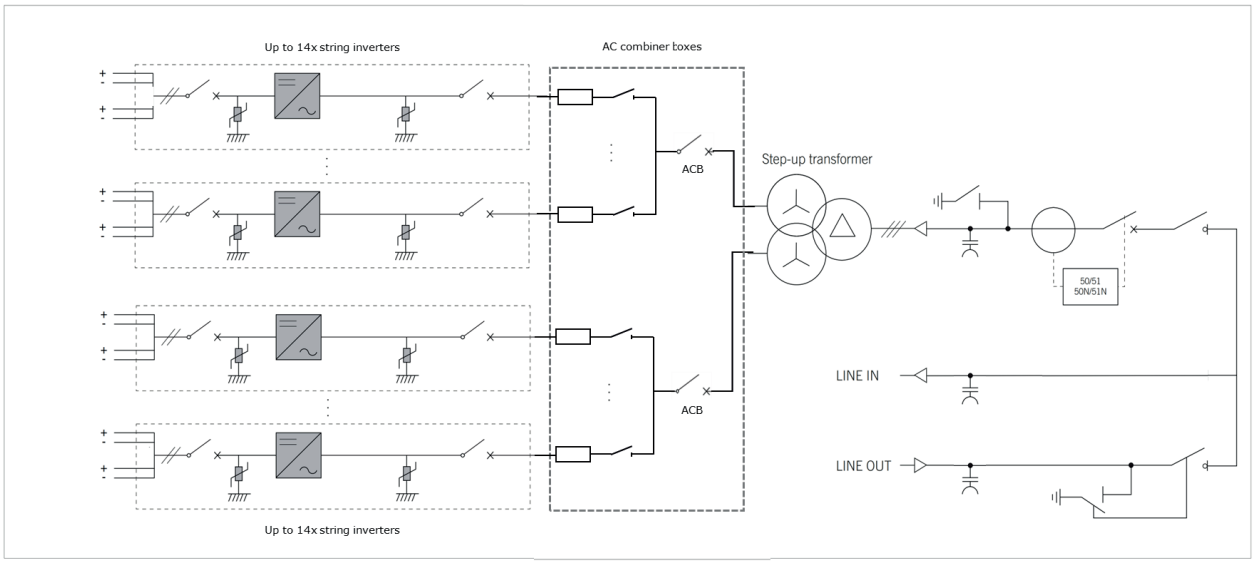

Specifications included in this datasheet could change without notice. Please contact Ingeteam's sales department in case of any queries.

ACC2022IQE03_

EUROPE

Ingeteam Power Technology, S.A.
Avda. Ciudad de la Innovación, 13
31621 Sarriguren (Navarra) - Spain
Tel.: +34 948 288 000
Fax: +34 948 288 001
e-mail: evc.energy@ingeteam.com

Ingeteam S.r.l.
Via Emilia Ponente, 232
48014 Castel Bolognese (RA) - Italy
Tel.: +39 0546 651 490
Fax: +39 054 665 5391
e-mail: italia.energy@ingeteam.com

Ingeteam SAS
140 Rue Carmin - Le Naurouze B
31670 Labège - France
Tel.: +33 (0)5 61 25 00 00
Fax: +33 (0)5 61 25 00 11
e-mail: france@ingeteam.com

Ingeteam, a.s.
Technologická 371/1
70800 Ostrava - Pustkovec
Czech Republic
Tel.: +420 59 747 6800
Fax: +420 59 732 6899
e-mail: czech@ingeteam.com

Ingeteam GmbH
Grand Bateau – Zollhof 6
D-40221 – Düsseldorf, Germany
Tel.: +49 (0) 211 78177950
e-mail: deutschland@ingeteam.com

Ingeteam Poland Spzoo
Ul. Koszykowa 60/62 m 39
00-673, Warsaw, Poland
Tel.: (+48) 22 821 99 30
e-mail: polska@ingeteam.com

Ingeteam LTD.
Unit 10 Gordano 19, Garanor Way, Portbury
Bristol, BS20 TXE - United Kingdom
Tel.: +44 (0) 331 630 0305

NORTH AMERICA

Ingeteam Inc.
3550 W. Canal St.
Milwaukee, WI 53208 - USA
Tel.: +1 (414) 934 4100 / +1 (855) 821 7190
Fax: +1 (414) 342 0736
e-mail: usa@ingeteam.com

Ingeteam Power Technology México S de RL de CV
Av. Ejército Nacional Mexicano 351,
Chapultepec Morales, Granada,
Miguel Hidalgo,
CP: 11520
Ciudad de México, CDMX
Tel.: (+52) 55 6586 9930
e-mail: proveedores.iptm@ingeteam.com

SOUTH AMERICA

Ingeteam Ltda.
Rua Estácio de Sá, 560
Santa Genebra
Campinas - SP
CEP: 13080-010; São Paulo - Brazil
Tel.: (+55) 19 30 37 37 73
e-mail: brazil@ingeteam.com

Ingeteam Chile SpA
Balmoral n.º 309, Piso 10º, Oficina 1008,
7561282 Las Condes
Santiago, Chile
Tel.: (+56) 229 253 825
e-mail: chile@ingeteam.com

ASIA

Ingeteam Power Technology Shanghai, Co. Ltd.
Room 2606-F, No.360 South Pudong Road
China (Shanghai) pilot free trade zone
C.P 200120
Tel.: +86 139 1622 4886
e-mail: liu.yimin@ingeteam.com

Ingeteam India Pvt. Ltd.
Survey No. 111/1-111/3 & 111/5-111/7,
Village No.155, Mambakkam Village,
Chennai - Bangalore Main Road,
Sriperumbudur Taluk,
Kancheepuram District - 602106,
Tamilnadu, India

Ingeteam Power Technology S.A. UAE Branch
Al Bateen tower c6 Bainunah 1st floor
Street 34
Abu Dhabi - UAE
Tel.: +971 2 207 6666

Ingeteam Power Technology S.A.
Thailand representative office
100/67 Vongvanij B Building, 22nd floor,
Rama IX Road., HuayKwang,
10320 Bangkok
Te.: +66 22461798
e-mail: Thailand.pga@ingeteam.com

AUSTRALIA

Ingeteam Australia Pty Ltd.
Iaccelerate Centre, Building 239
Innovation Campus, Squires Way
North Wollongong, NSW 2500 - Australia
Tel.: +61 429 111 190
e-mail: australia@ingeteam.com

Ingeteam

www.ingeteam.com