Powerwall 3

Power Everything

Energy

Powerwall 3 is a fully integrated solar and battery system designed to accelerate the world's transition to sustainable energy. Powerwall 3 can store solar or grid energy for later use when the sun goes down or when the electricity prices are high; lowering their electricity bills, reducing their reliance on the grid, and power their homes during a grid outage. Once installed, customers can manage their home energy system using the Tesla App and customize system behavior to meet their energy goals.

Powerwall 3 has the ability to store up to 13.5 kWh of energy and start heavy loads rated up to 185 A LRA, meaning a single Powerwall 3 can support the power needs of most homes. Powerwall 3 is designed for fast and efficient installation and modular system expansion. With multiple Powerwall 3 units and/or **Expansions**, it is easier and more affordable to scale up customers' systems to provide 11.04 kW AC of continuous power and to store up to 81 kWh of energy.

Powerwall 3 Technical Specifications

System Technical Specifications

Model Number		1707000-xx-y	
Nominal Grid Voltage (Input & Output)		230 VAC	
Grid Type		Single phase	
Frequency		50 Hz	
Usable Battery Energy (AC) [1]		13.5 kWh	
Nominal AC Output Power at 230 V (kW) [2]		3.68	5
Maximum Apparent Power (kVA)		3.68	5
Maximum Continuous Current (A)		16	21.7
Overcurrent Protection Device (A)		20	32
Maximum Continuous Charge Power (Powerwall 3 only)	AC	Configurable up to 5 kW	
	DC	5 kW	
Maximum Continuous Charge Power (Powerwall 3 with up to (3) Expansions)	AC	Configurable up to 5 kW	
	DC	5 kW	
Output Power Factor Rating		0 - 1 (Grid Code configurable)	
Maximum Output Fault Current (1 s)		160 A	
Maximum Short-Circuit Current Rating		10 kA	
Load Start Capability		185 A LRA (Locked Rotor Amps)	
Solar to Battery to Home/Grid Efficiency [1,3]		89%	
Solar to Home/Grid Efficiency [4]		97.5%	
Power Scalability		Up to 4 Powerwall 3 units supported	
Energy Scalability		Up to 3 Expansion units (for a maximum total of 7 units)	
Supported Islanding Device		Backup Gateway 2	
Connectivity		Wi-Fi (2.4 and 5 GHz), Ethernet, Cellular (LTE/4G [5])	
Hardware Interface		Dry contact relay 60V 2A, Rapid Shutdown (RSD) certified switch and 2-pin connector, RS485 connector for Tesla Remote Meter	
AC Metering Accuracy		+/- 0.5%	
Protections		Integrated arc fault circuit interrupter (AFCI), Isolation Monitor Interrupter (IMI), Integrated DC Isolator	
Customer Interface		Tesla Mobile App	
Warranty [6]		10 years	

[1] 15 kWh is the DC battery energy. 13.5 kWh AC is minimum guaranteed at beginning of life, 25°C, and 5 kW charge/discharge power.

[2] Powerwall 3 can output up to 15.4 kW AC power at 64 A and 240 V.

[3] Typical use case with energy produced by PV and stored in battery and then released to loads or the grid.

[4] Tested using EU weighted efficiency methodology.

[5] The customer is expected to provide internet connectivity for Powerwall 3; cellular should not be used as the primary mode of connectivity. Cellular connectivity subject to network operator service coverage and signal strength.

[6] Powerwall 3 must be reliably connected to the internet to secure the full 10-year warranty.

Powerwall 3 Technical Specifications

Solar Technical Specifications

Maximum Solar STC Input	13 kW
Withstand Voltage	600 V DC
PV DC Input Voltage Range	60 — 550 V DC
PV DC MPPT Voltage Range	60 — 480 V DC
MPPTs	3
Maximum Current per MPPT (I_{mp})	30 A
Maximum Short Circuit Current per MPPT (I_{sc})	38 A

Environmental Specifications

Operating Temperature [7]	-20°C to 50°C
Operating Humidity (RH)	Up to 100%, condensing
Storage Temperature	-20°C to 30°C, up to 95% RH, non-condensing, State of Energy (SOE): 25% initial
Maximum Elevation	2000 m
Environment	Indoor and outdoor rated
Enclosure Rating	IP55
Ingress Rating	IP67 (Battery & Power Electronics) IP55 (Wiring Compartment)
Pollution Rating	PD3
Operating Noise @ 1 m	< 50 db(A) typical, < 62 db(A) maximum

Compliance Information

Certifications	IEC 61000-6-1:2016, IEC 61000-6-3:2020, IEC 62477-1:2022, IEC 62109-1:2010, IEC 62109-2:2011, IEC 62933-5-2:2020, IEC 62619:2022, UL 9540A, UN 38.3, Radio Equipment Directive 2014/53/EU, EN 50549-1 2019 + A1: 2023, EN 50549-10:2022
Environmental	RoHS Directive 2011/65/EU, REACH Regulation EC 1907/2006
Grid Connection	Single phase
Emissions	FCC Part 15 Class B, ICES 003
Seismic	AC156, IEEE 693-2005 (high)
Fire Testing	Meets the unit level performance criteria of UL 9540A

Mechanical Specifications

Dimensions	1105 x 609 x 193 mm
Weight	130 kg
Mounting Options	Floor or wall mount

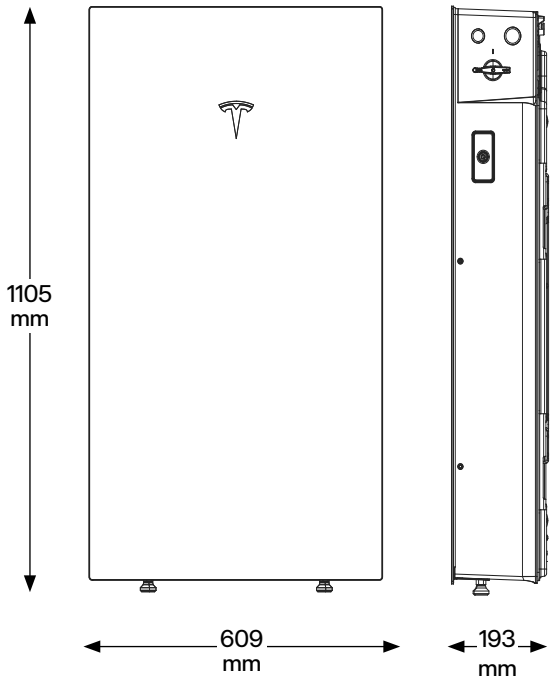

[7] Powerwall 3 is designed to operate in all climates and in direct sunlight, from temperatures of -20°C to 50°C. Performance may be de-rated at operating temperatures above 40°C.

Powerwall 3 Expansion Technical Specifications

Battery Specifications

Model Number	1807000-xx-y
Usable Battery Energy	13.5 kWh
Voltage Range [1]	52 - 92 V DC

Environmental Specifications

Operating Temperature [2]	-20°C to 50°C
Operating Humidity (RH)	Up to 100%, condensing
Storage Temperature	-20°C to 30°C, up to 95% RH, non-condensing, State of Energy (SOE): 25% initial
Maximum Elevation	2000 m
Environment	Indoor and outdoor rated
Ingress Rating	IP67
Pollution Rating	PD3

Compliance Information

Certifications	IEC 62619, IEC 62933-5-2, IEC 61000-6-1:2016, EN IEC 61000-6-3: 2020

Mechanical Specifications

Dimensions [3]	1105 x 609 x 168 mm		
Total Weight	118.5 kg (wall-mounted unit with glass front cover and bracket)		
Weight of Expansion Unit	110 kg (without glass front cover and bracket)		
Mounting Options	Floor or wall mount		
Stacking Capability	Up to (3) Expansion units behind a Powerwall 3 (floor mount only)		
Compatibility	Only with Powerwall 3		
Connection to Powerwall 3 or Expansions	Expansion harness		
Expansion Harness Options	0.5 m	2 m	4 m

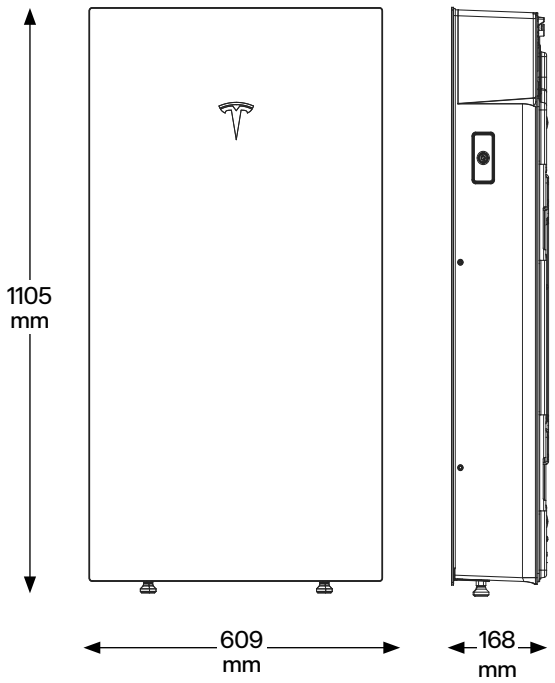

[1] Powerwall 3 Expansion units are connected in parallel and are not field serviceable.
[2] Performance may be de-rated at operating temperatures above 40°C.
[3] These dimensions include the glass front cover being installed on the Expansion unit.

Backup Gateway 2 Specifications*

Backup Gateway 2 is required for installing Powerwall 3 in backup configuration. It provides energy management and monitoring for solar self-consumption, time-based control, and backup operation. It detects power outages and disconnects Powerwall 3 from the grid to prevent backfeed and provide quick backup power. For the recommended backup configurations, see "Powerwall 3 Backup Example System Configurations" on page 6.

*Powerwall 3 can be installed in non-backup configuration. For this configuration, Backup Gateway 2 is **not** required. For the recommended non-backup configurations, see "Powerwall 3 Non Backup Example System Configurations" on page 8.

Electrical Specifications

AC Voltage (Nominal) [1]	230 V (Line-to-Neutral) 400 V (Line-to-Line)
Feed-In Type	Single phase, Three phase
Grid Frequency	50-60 Hz
Maximum Overcurrent Protection Device	100 A (single-phase service) 80 A (2- and 3-phase service)
Maximum Input Short Circuit Current	10 kA
Overvoltage Category	Category III
AC Metering Accuracy	+/– 0.2 %
Compatible Earthing Systems [2]	TN or TT networks
Distribution boards intended to be operated by ordinary persons (DBO) Type	Type B

Environmental Specifications

Operating Temperature [3]	–20°C to 50°C
Operating Humidity (RH)	Up to 100%, condensing
Maximum Altitude	3000 m
Ingress Rating	IP55
Environmental Category	Indoor and outdoor rated
Pollution Degree	PD2

Compliance Information

Safety	IEC 62109-1, IEC 62053-22, IEC 61439-1, IEC 61439-3
EMC and Radio Equipment	EMC Directive 2014/30/EU, RED 2014/53/EU, IEC 61000-6-1, IEC 61000-6-3, EN 55024, EN 300 328, EN 300 440, EN 301 489-1, EN 301 489-17, EN 301 489-52, EN 301 511, EN 301 893, EN 301 908-1
Environmental	ROHS DIRECTIVE 2011/65/EU WEEE Directive 2012/19/EU Regulation (EU) 2023/1542 REACH Regulation EC 1907/2006
Seismic	AC156, IEEE 693-2005 (high)

Mechanical Specifications

Dimensions	584 x 380 x 127 mm
Weight	11.4 kg
Breaker Space	Up to 9 single pole breakers on DIN rail
Mounting	Wall mount

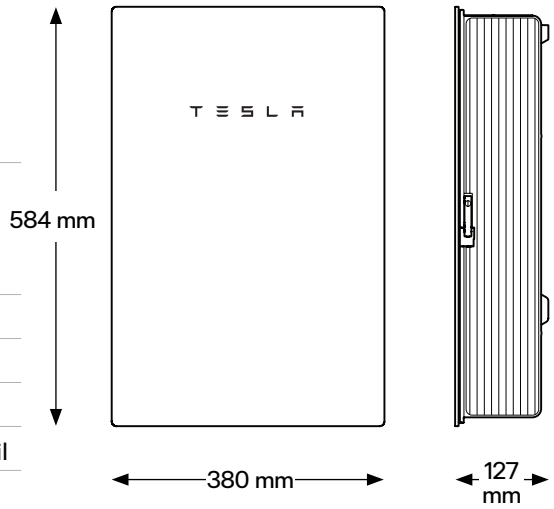

[1] 230 V (Line-to-Line) is not a supported three-phase configuration.

[3] TT earthing networks supported for Gateways with part number 1152100-13-H and higher.

[4] Performance may be de-rated in extreme ambient temperatures.

Powerwall 3 Backup Example System Configurations

Whole Home Backup

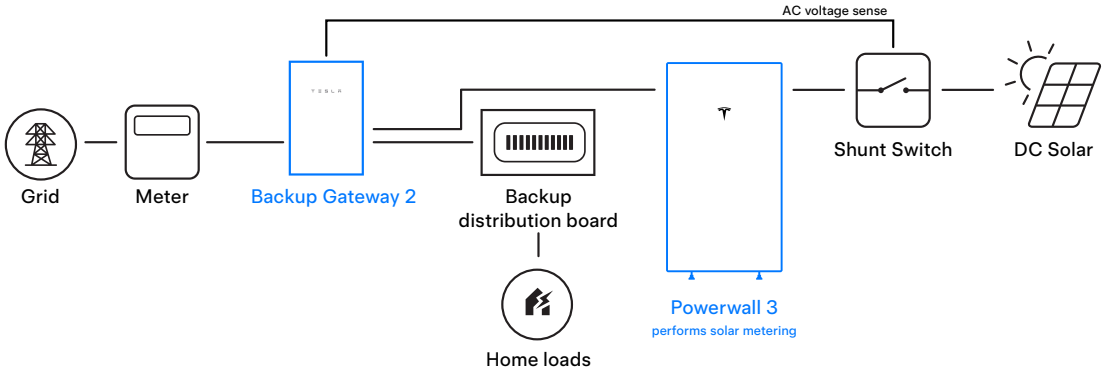

Partial Home Backup with Loads Downstream of Backup Gateway 2

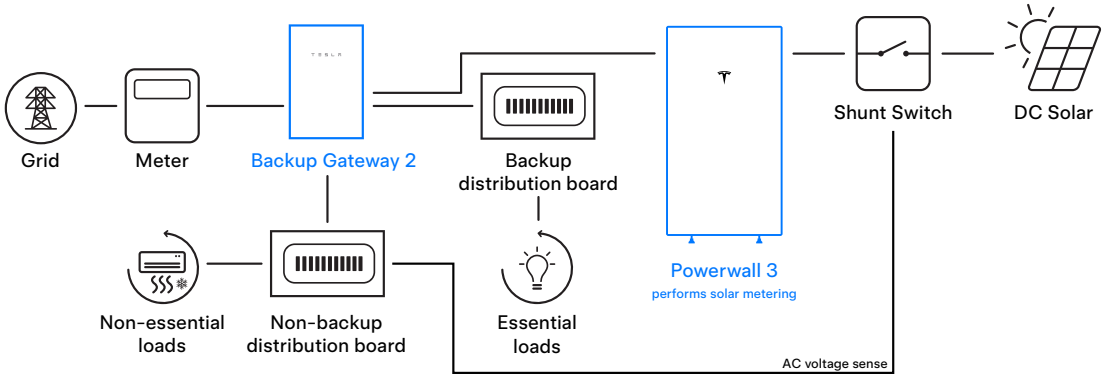

Partial Home Backup with Loads Upstream of Backup Gateway 2

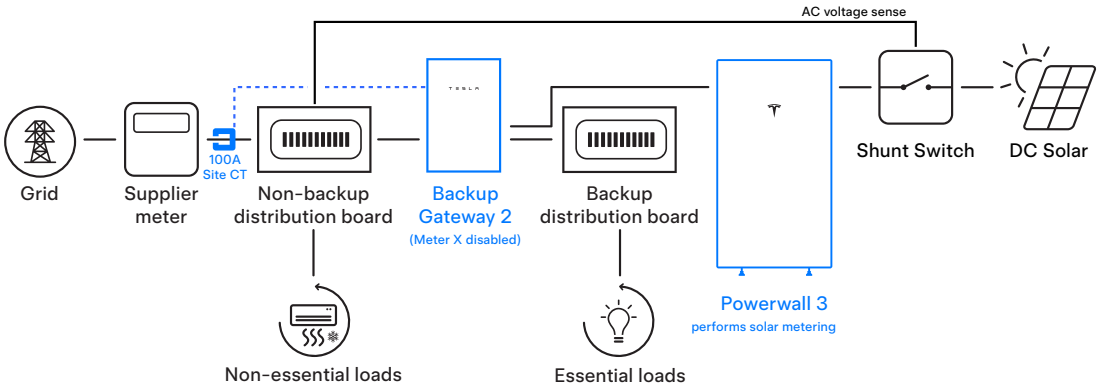

Powerwall 3 Backup Example System Configurations

Partial Home Backup with Loads Upstream of Backup Gateway 2 and AC Coupled Solar

Note: Note: For Tesla Remote Meter specifications, see Tesla Remote Meter Datasheet.

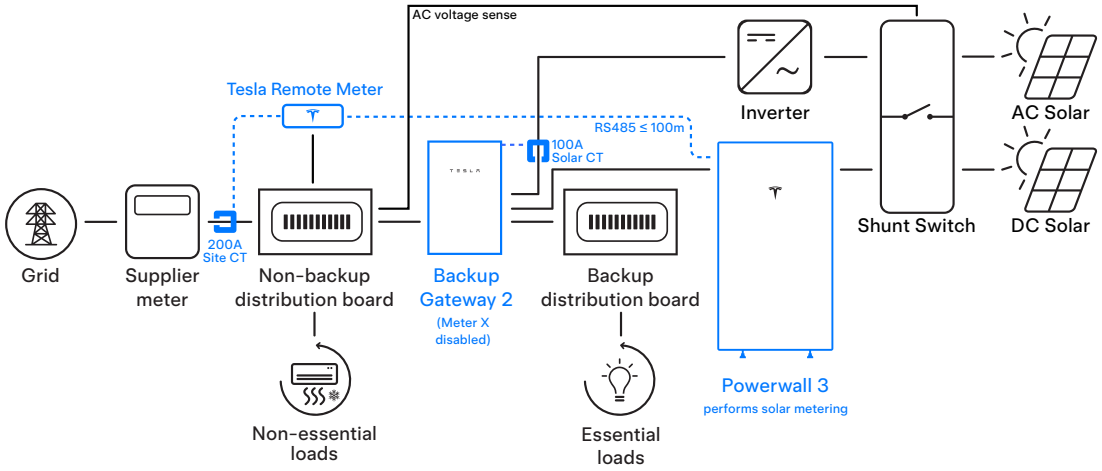

Multi-Powerwall 3 System with up to (4) Powerwall 3 Units and up to (3) Expansion Units

Note: This is the current maximum system size and is supported on all of the above system configuration examples.

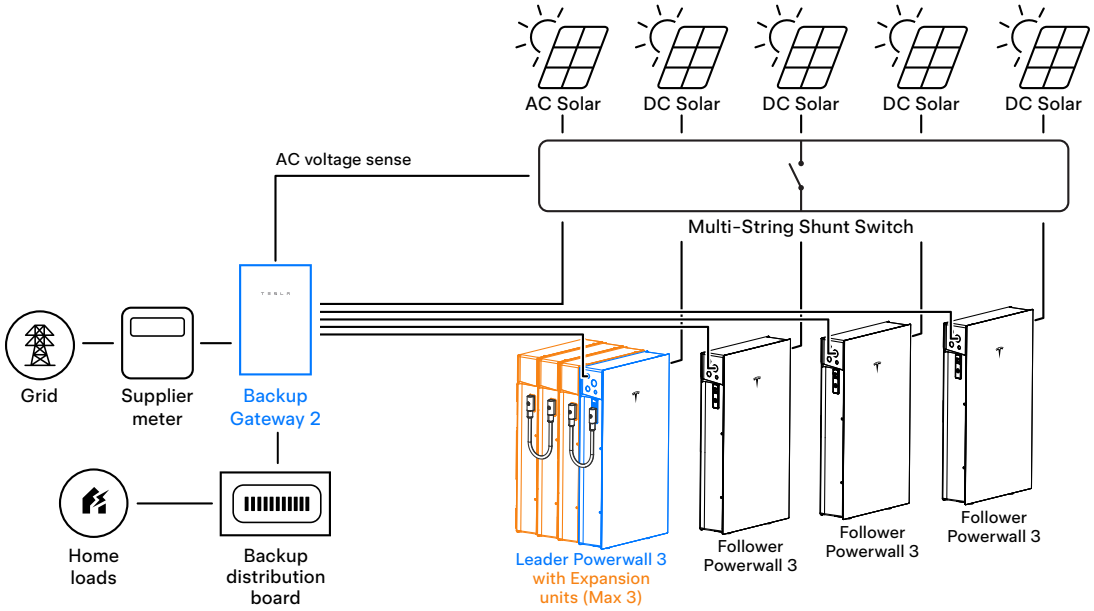

Powerwall 3 Non-Backup Example System Configurations

Single Powerwall 3 with AC Coupled Solar

Note: For Tesla Remote Meter specifications, see Tesla Remote Meter Datasheet.

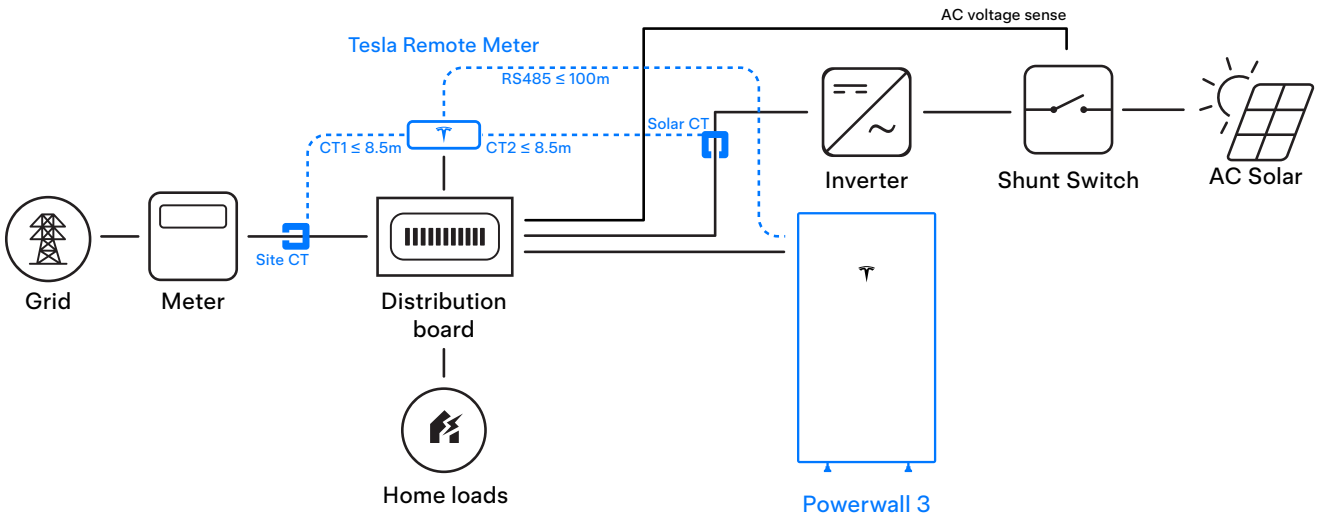

Multi-Powerwall 3 System with up to (4) Powerwall 3 Units and up to (3) Expansion Units
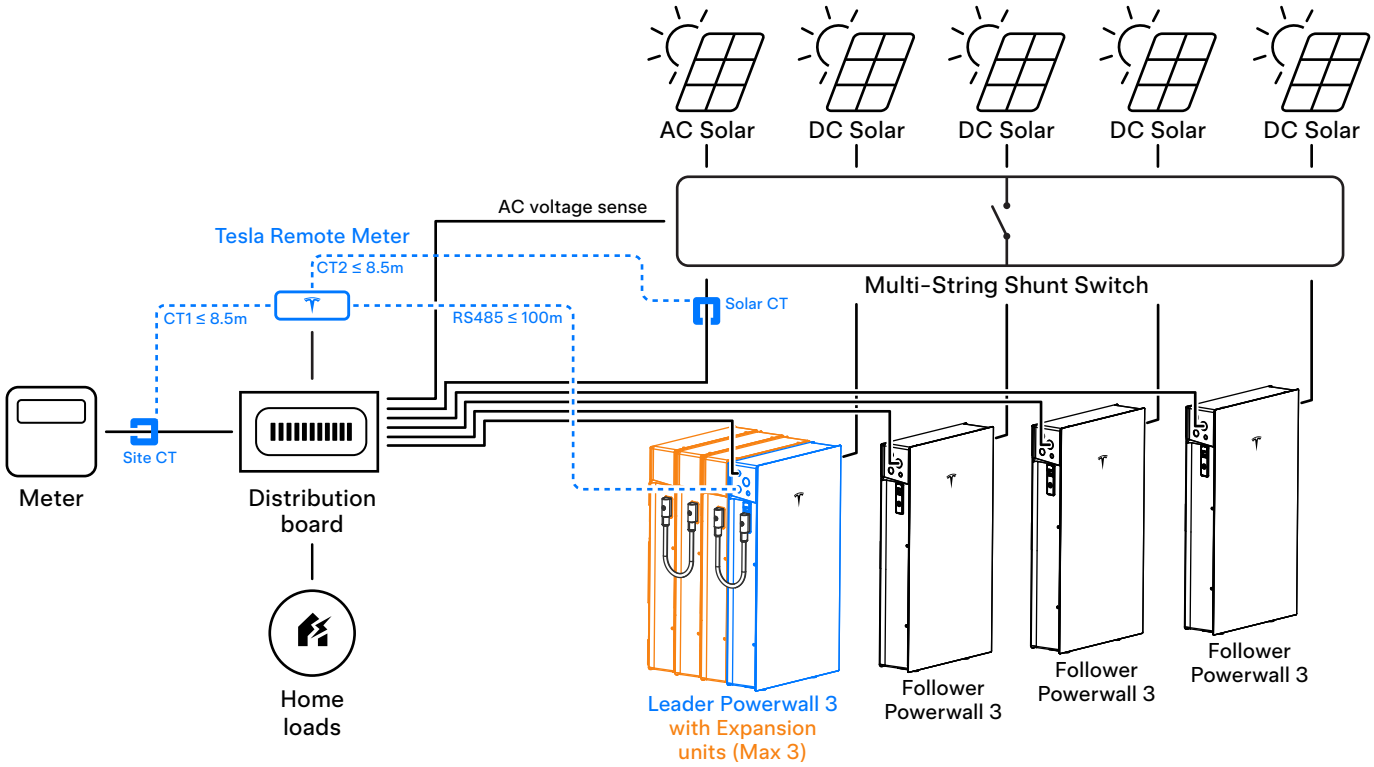
Note: This is the current maximum system size and is supported on the above non-backup system configuration example.