BB-200

SUNFER
Solar Mounting Systems

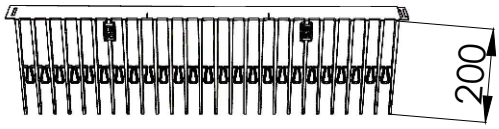

BB-200 valid for 115 ≤ X ≤ 190 mm, where X is the maximum height of the module in relation to the tiles, irrespective of the type of tile and fixing or product, as shown in the following example:

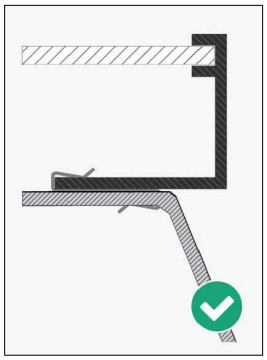

Correct positioning of the product using the included clamps for open profile panel frames: the BB must be fixed using 8 clamps per metre, placing 1 clamp on each strip joint and 2 clamps between joints.

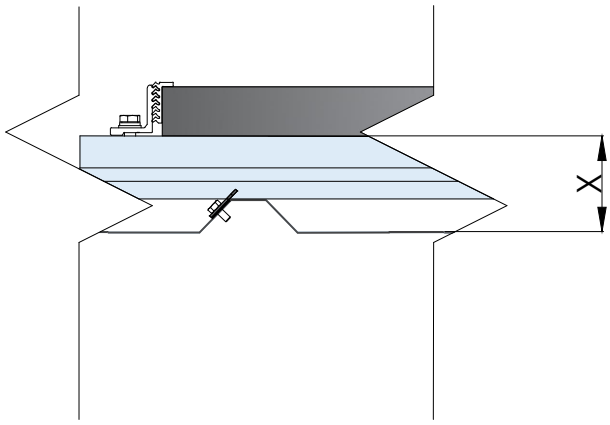

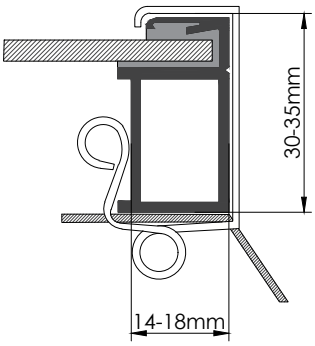

Correct positioning of the product by means of the optional BBClip (not included) for closed profile panel frames; there are two sizes to choose from, depending on the module frame dimensions:

- 11x30x14-18 mm
- 11x35x14-18 mm

The BB must be fixed with 8 clips per metre, 4 on each strip, between joints.

The optional BBTool (not included) is recommended for faster and more efficient installation.

The BB-200 is recommended for all coplanar products, especially tile products and continuous rail metal roof products, but also microrail products if 115 is ≤ X.

In any case, it must be checked that X is < 190 mm.

Specifications

Description	BirdBlocker 200 mm needle. Accessory for blocking the passage of birds under the panels.
Material	UV resistant black high density polyethylene (HDPE). Clip material: stainless steel.
Features	Strips 50 cm long. Needle length: 200 mm. Maximum cap height: 195 mm. Maximum height from ceiling surface to module: 190 mm.

Safety:

Subject to change without notice. Product illustrations are for illustrative purposes only and may differ from the delivered product.

BB-200

SUNFER
Solar Mounting Systems

Graphical examples of the maximum module height with respect to the roof, X, to be measured for the choice of BB, on different tiles and roofs, in the various coplanar product fixings:

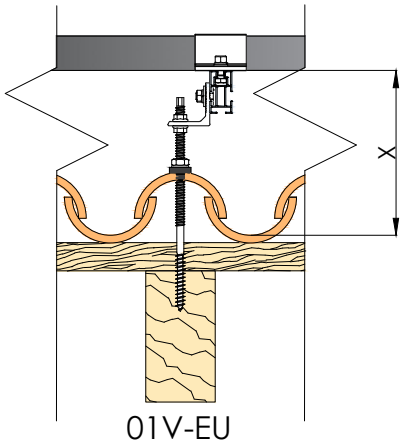

01V-EU

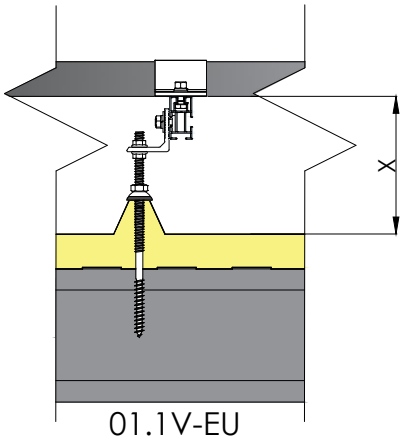

01.1V-EU

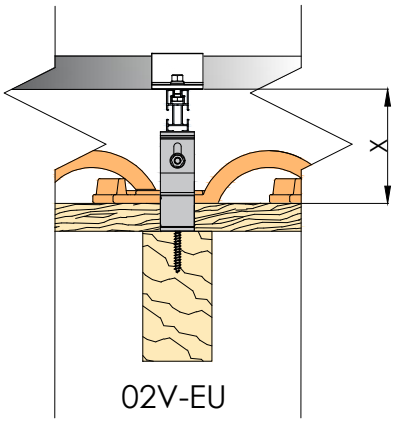

02V-EU

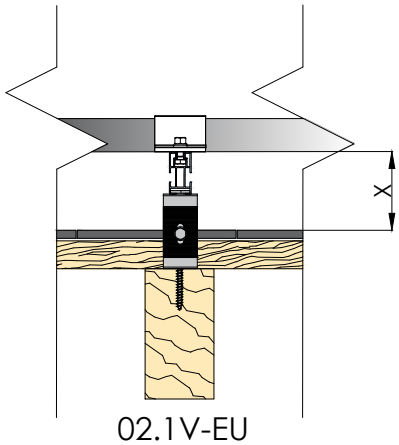

02.1V-EU

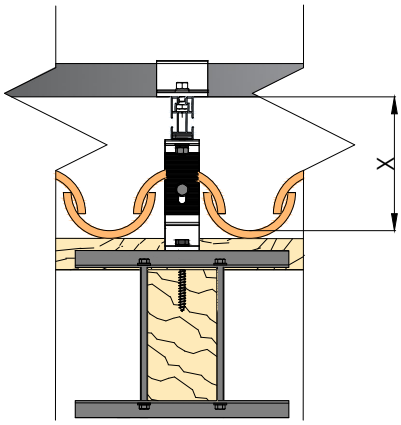

02.2V-EU

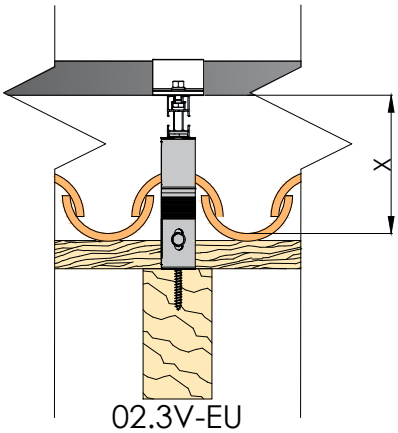

02.3V-EU

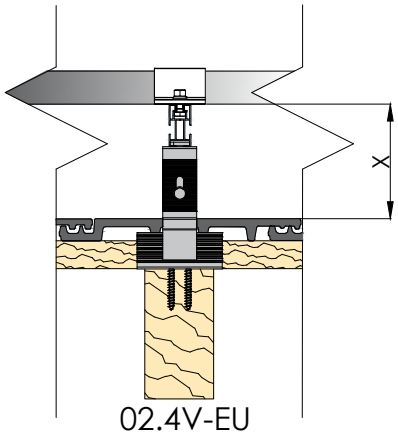

02.4V-EU

Subject to change without notice. Product illustrations are for illustrative purposes only and may differ from the delivered product.

BB-200

SUNFER
Solar Mounting Systems

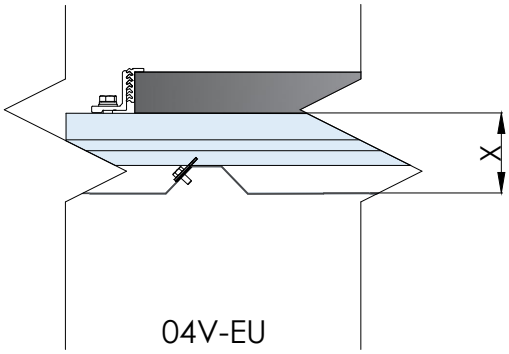

04V-EU

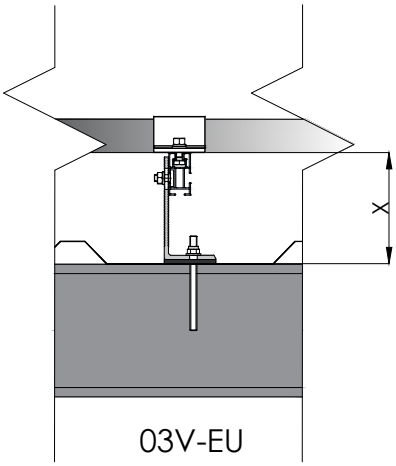

03V-EU

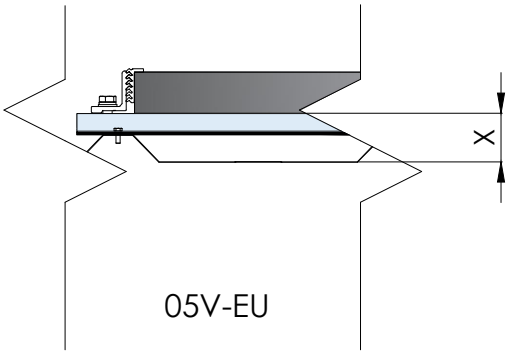

05V-EU

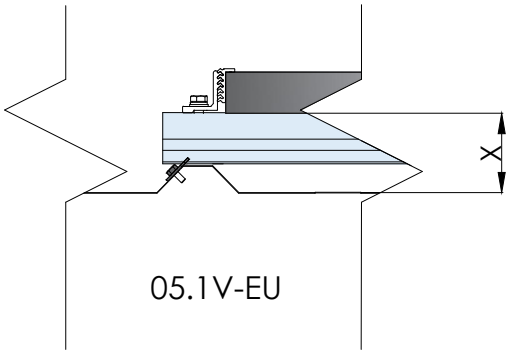

05.1V-EU

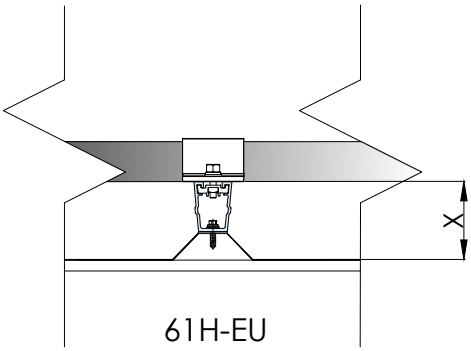

61H-EU

Subject to change without notice. Product illustrations are for illustrative purposes only and may differ from the delivered product.

Assembly:

1. Trim the needles to the height of X + 1 cm:

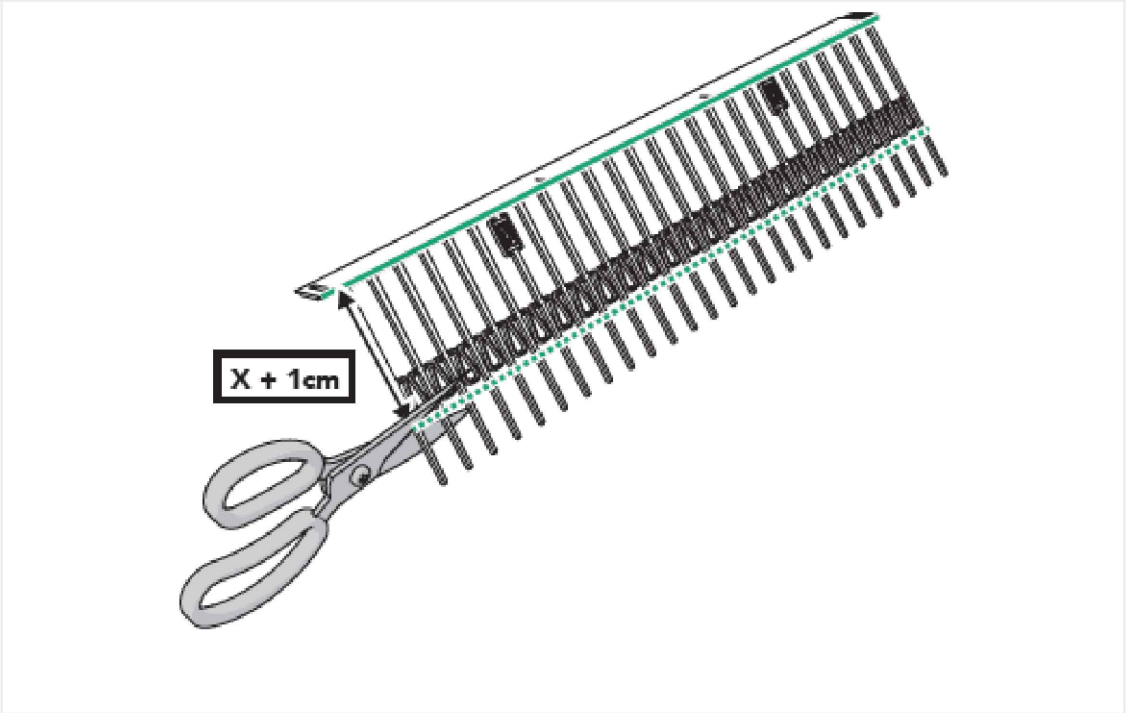

2. Trim and fold the strips to form the outer and inner corners:

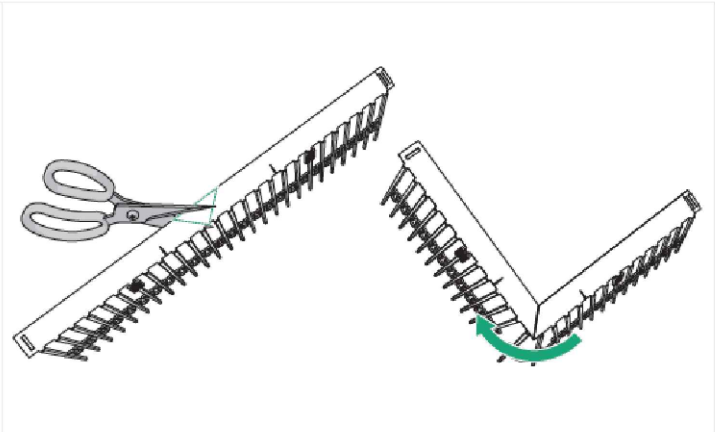

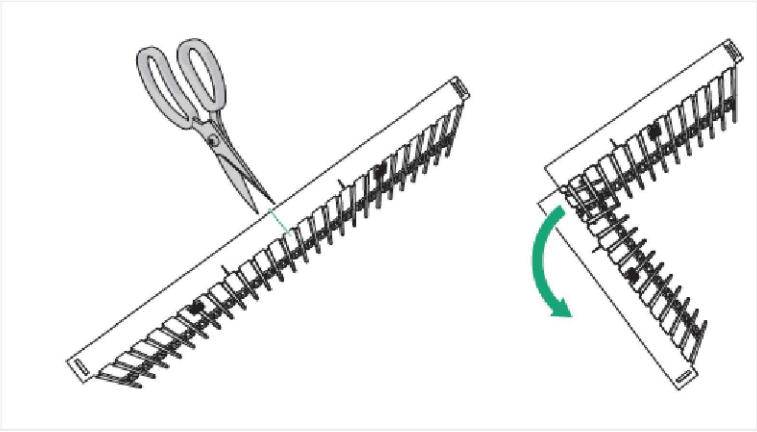

Subject to change without notice. Product illustrations are for illustrative purposes only and may differ from the delivered product.

3. Place the clips on the marks on the strips and on the joints with the logo facing upwards:

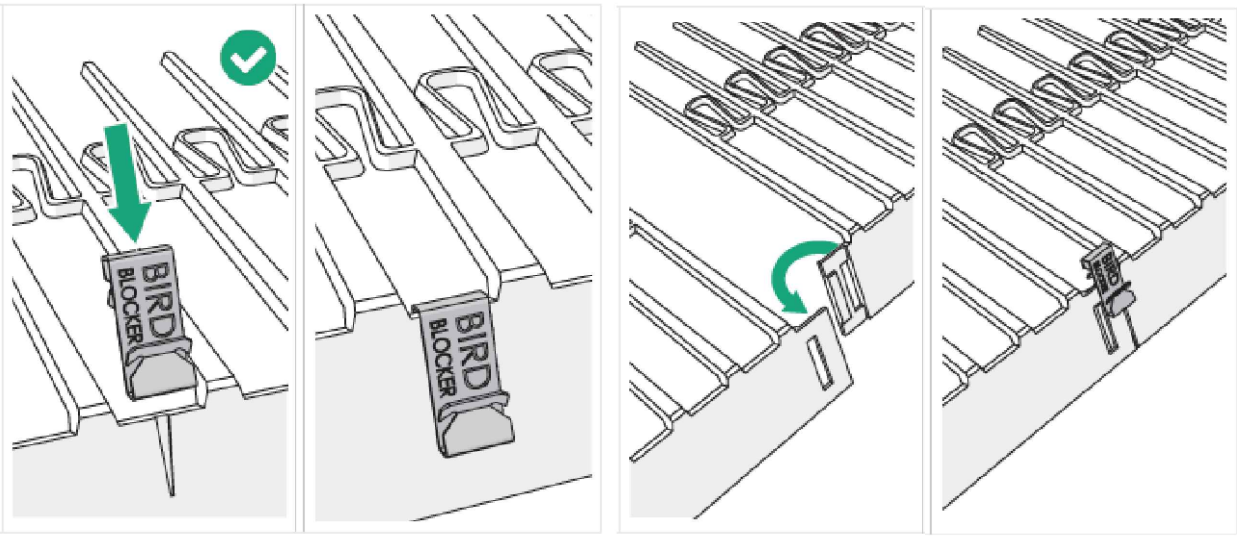

4. Cut out holes for the panel fastening profiles:

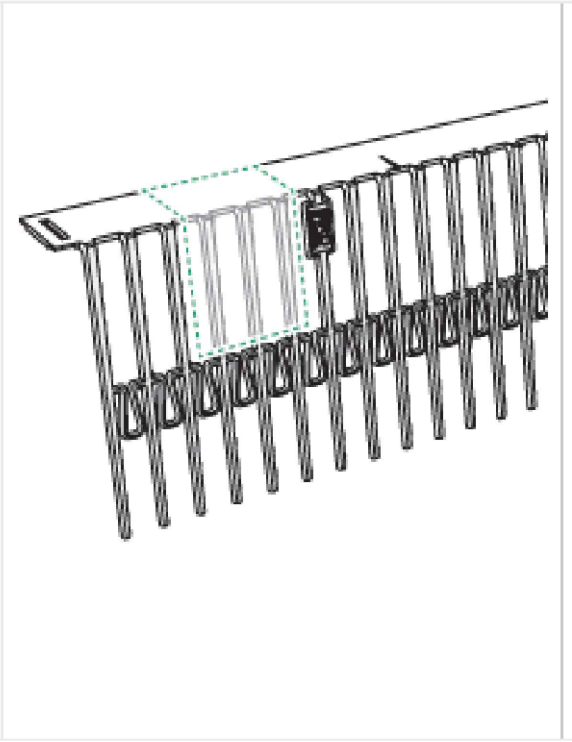

Subject to change without notice. Product illustrations are for illustrative purposes only and may differ from the delivered product.

5. Fix the strips to the module frames using the clips:

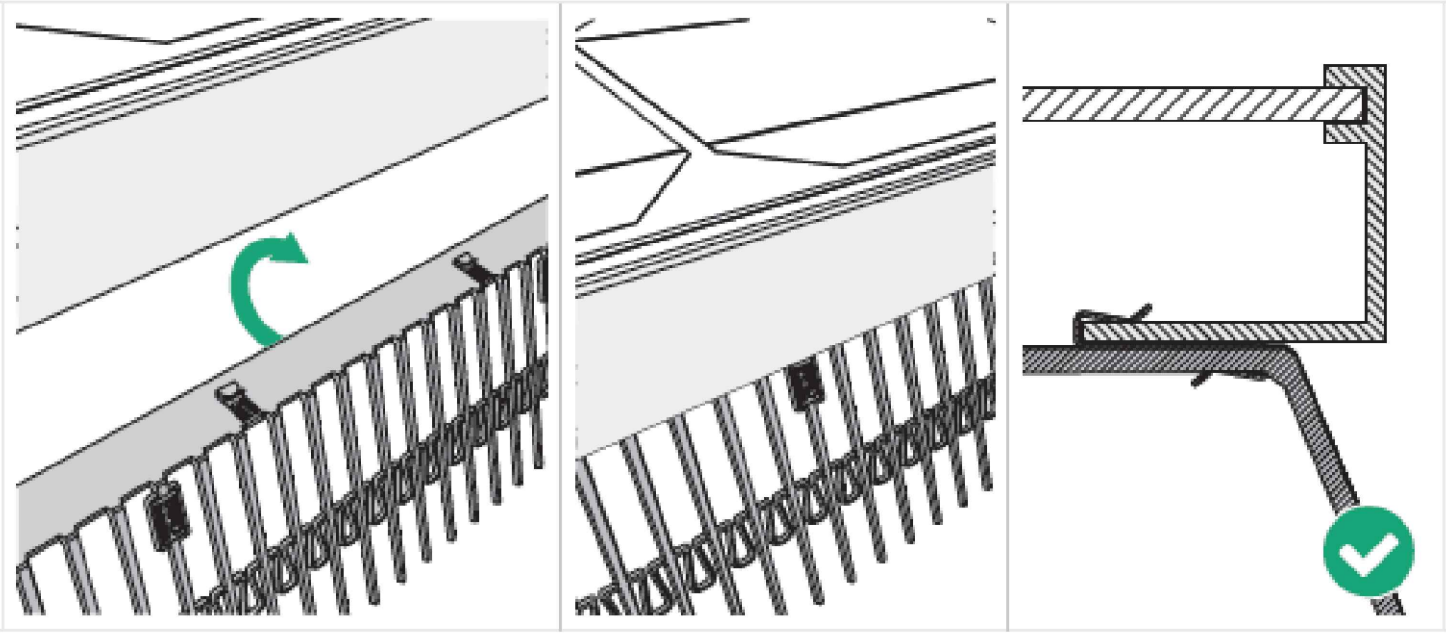

6. Connect the loose strips with the plastic ties:

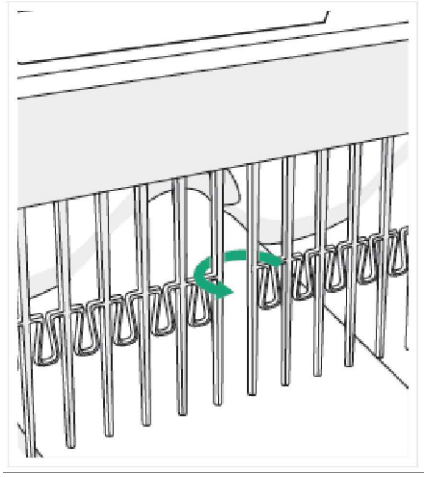

Subject to change without notice. Product illustrations are for illustrative purposes only and may differ from the delivered product.

* If the frame of the modules is a closed profile, the same procedure must be followed, replacing the clips with BBClip, using 4 clips per strip, between joints; for this purpose, due to the small width of the panel frames, it is necessary to cut 4 triangular segments from the rear BB strip:

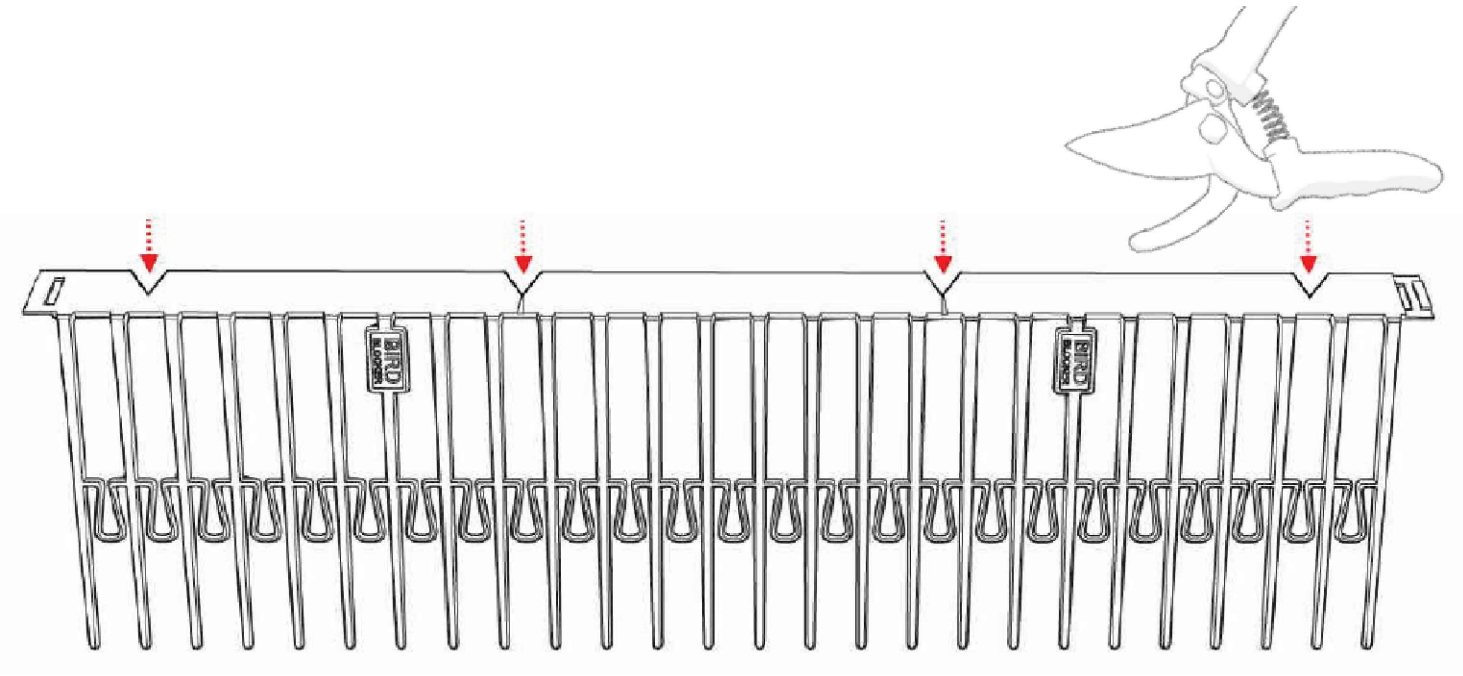

Subject to change without notice. Product illustrations are for illustrative purposes only and may differ from the delivered product.